Delayline Detector
DLD 4444

Manual

Surface Concept GmbH

Am Sägewerk 23a
55124 Mainz
Germany

Tel. ++49 6131 627160
Fax: ++49 6131 6271629

www.surface-concept.com,
support@surface-concept.de

Manual Version: 2.1

Printed on: 2010-05-05

1 Table of Contents

2 Introduction

2.1 General Information

This manual is intended to assist users in the installation, operation and maintenance of the Delayline Detectors DLD 4444. It is divided into 12 chapters. It is divided into 12 chapters. The chapter "Introduction" contains a brief description of the DLD. The chapter "Installation" refers to installation and cabling. One chapter describes the USB driver installation. Chapter "Principle of Operation" explains the theory of operation of the DLD. 3 chapters describe the technical details of the detector readout package and chapter "Operation of the DLD" describes the operation of the DLD. The final chapters contain amongst others technical details about the microchannel plates and the delayline detector in general.

2.2 Safety Instructions

Please read this manual carefully before performing any electrical or electronic operations and strictly follow the safety rules given within this manual.

The following symbols appear throughout the manual:

The "note symbol" marks text passages, which contain important information/ hints about the operation of the detector. Follow these information to ensure a proper functioning of the detector.

The "caution symbol" marks warnings, which are given to prevent an accidentally damaging of the detector or the readout system. Do NOT ignore these warnings and follow them strictly. Otherwise no guarantee is given for arose damages.

The "high voltage symbol" marks warnings, given in conjunction with the description of the operation/ use of high voltage supplies and/ or high voltage conducting parts. Hazardous voltages are present, which can cause serious or fatal injuries. Therefore only persons with the appropriate training are allowed to carry out the installation, adjustment and repair work.

2.3 General Overview of the System

The Surface Concept delayline detectors are particularly developed for the needs of 1D(x), 2D(x,t), 2D(x,y) or 3D(x,y,t) area and time detection of electrons, ions, x-ray and UV-light.

The DLD 4444 is mounted on CF 150 vacuum flange with feed-throughs for high voltage supply and signal transfer. It consists of a microchannel plate stack and two layers (x, y) of meander structured delaylines. The image is sampled by the DLD readout electronics.

The 3D (x, y, t) detection bases on the measurement of time differences and time sums of signals, with a high temporal resolution in one device. The count rate can reach up to 3.0 MHz in the commonly used 4-fold coincidence measurement.

Typical applications are:

- imaging of parallel incident particle beams, particularly electrons
- spatially resolved time of flight spectroscopy in 2D/time resolved mode
- time referenced imaging of electrons excited by repetitive driven sources

and in energy analyzers:

- Fermi surface mapping, band mapping, photoelectron diffraction measurements, and similar angular dispersion experiments in 2D mode
- XPS, UPS, ESCA and AES in virtual channel mode
- Stroboscopic experiments in 2D/time resolved mode

3 Installation

3.1 Initial Inspection

Visual inspection of the system is required to ensure that no damage has occurred during shipping. Should there be any signs of damage, please contact SURFACE CONCEPT immediately. Please check the delivery according to the packing list (see Table 1) for completeness.

1. High Resolution USB 2.0-TDC including DLD readout cable (HDMI)
2. Power cables
3. USB 2.0 cable
4. Single HV Supply including SHV cable
5. GUI Monitor Software (CD) and Manuals
6. Delayline detector unit (delivered in a vacuum container)
7. Pulse processing unit ACU 3.4.2a (not displayed)

Table 1: Packing list for the Delayline Detector

Figure 1: Contents of delivery package

3.2 Installation

3.2.1 Mounting the delayline detector

The detector is transported under vacuum. Vent the transport container **carefully.** Release the M8 screws of the vacuum container and pull out the detector **carefully**.

Check the front side of the MCP stack for particles.

CAUTION

The microchannel plates in front of the detector should be protected from exposure to particle contamination. Particles that stick to the plate can be removed by carefully using a single-hair brush carefully and/or with dry nitrogen. Reading the instructions "microchannel plates" in chapter 11 is strongly recommended.

Install the detector into your vacuum chamber.
Keep the vacuum container in case that the detector must be sent back for repair. It can also be used to store the detector when not installed in a vacuum chamber.

Note

The detector should be kept under vacuum all the time.

3.2.2 Detector Orientation

The black dot in Figure 2 marks the 0/0 position of the DLD image which corresponds to the upper left corner of the image in the GUI software.

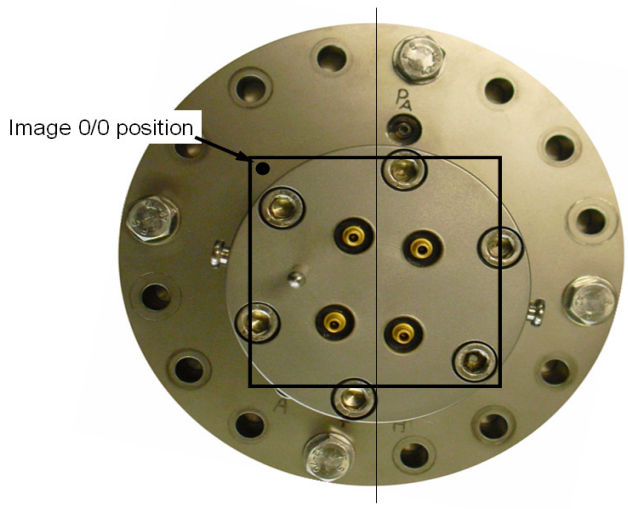

Figure 2: 0/0 position of the DLD image (black dot).

3.2.3 Cabling and High Voltage

The general connection scheme of the delayline detector including its readout package is shown in Figure 3.

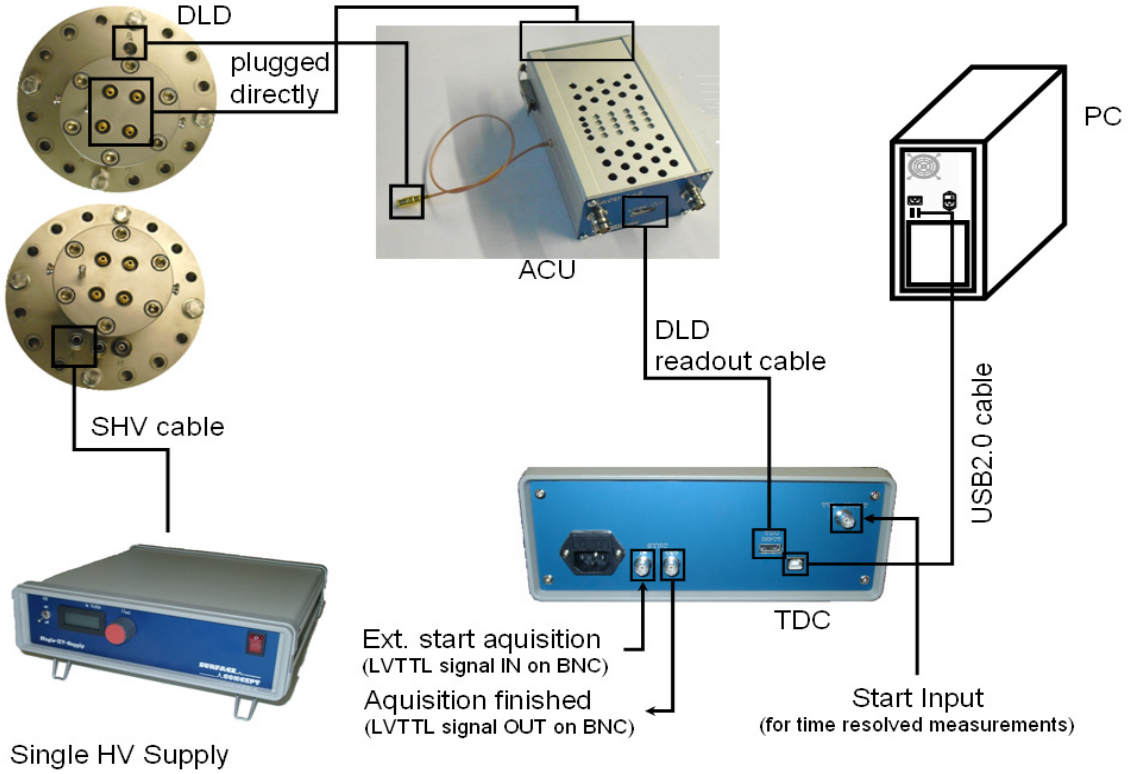

Figure 3: Connection scheme of the delayline detector and readout package

- The pulse processing unit ACU can be connected directly to the DLD 4-fold SMB feed-through. The metal pin gives the orientation. Fasten the ACU with the two clips on the housing. There is a single cable with a SMB plug sticking out at one side of the ACU. This cable is used to feed the decoupled pulses from the DLD anode into the ACU. Connect this cable to the SMB socket named "P_A" on the CF100 flange of the DLD.

- Use the DLD readout cable to connect the "Lines Out" socket on the front of the ACU with the "TDC Input" socket at the rear panel of the USB2.0-TDC. To perform time measurements with respect to an external clock, provide start pulses to the start input of the TDC. Use the BNC socket named "TTL Start" to apply standard TTL signals.

Note

The start input of the TDC is not working with start signals of frequencies smaller 25 kHz and larger than 7 MHz.
Larger start pulse frequencies must be divided down with an appropriate frequency divider (e.g. divider with factor of 16 for 80 MHz start pulse frequency).

- There are 2 SHV and 1 BNC feed-throughs for high voltage supply of the detector directly soldered into the CF100 flange. They connect the detector anode (A), the front side of the MCP stack (F), and the housing (H) carrying a grid in front of the MCP stack and isolated from the rest of the detector.

The MCP front connection can be used to apply a reference voltage (e.g. the column potential in an electron microscope or the Herzog potential in an electron spectrometer). Further information about the layout of the internal detector cabling and HV connection can be found in chapter 6.

Note

Two SHV termination plugs are included in the delivery. In cases that no reference voltage is applied to the MCP front, one termination plug must be used to ground the MCP front. Otherwise the MCP stack is not functioning as the reference potential is missing. The second termination plug can be used to ground the grid.

CAUTION

Be sure that all voltages are settled to zero before connecting the high voltage cables to the detector, otherwise serious damage to the detector can occur due to high voltage sparks.

- Connect the power cable to the main connector of the USB2.0-TDC and use the USB 2.0 cable to connect the USB2.0-TDC to the PC. Switch on the TDC and follow the instructions for installing the device driver if connected for the first time. If the device driver is already installed, the USB connection is established automatically. Do not use PC front panel USB connectors; they are often restricted in performance. For further details on driver installation please see chapter 4.
  If the device driver is already installed, the USB connection is established automatically.

CAUTION

Finish the complete cabling before the TDC is turned on and the GUI monitor software is started. Also, close the software and turn off the TDC before performing any changes to the cabling. This applies especially to the connection and disconnection of the start input of the TDC. The start input of the TDC cannot handle pulses which are arriving in a time interval of smaller than 150 ns, as they are produced by e.g. connecting to and disconnecting from the start input respectively.

Don't start the detector operation before you are familiar with the detailed descriptions of chapter 10 within this manual.

3.2.4 Recommended System Requirements

Read-out of the USB2.0–TDC is done with a standard PC via USB2.0. For the PC the following system requirements are highly recommended:

- Processor: 1.6 Ghz
- RAM: 1GB
- Windows XP / Windows 2000
- USB 2.0 (no front panel connector)
- Monitor resolution: in Y min. 864 pixel (most critical), in X min. 1024 pixel

Note

The use of USB2.0 for the readout of the TDC is highly recommended. In principle the readout of the TDC is compatible to USB1.0, but the required data transfer rates are not reached. Do not use PC front panel USB connectors; they are often restricted in performance.

4 USB 2.0 Driver Installation

- First, log on as Administrator. Close all applications on your PC. If you are using any anti-virus or firewall software, close them (or disable them). Connect the USB cable to your Windows System with USB2.0 enabled. Windows will find the new hardware, and the "Found New Hardware Wizard" will launch. To continue, select “No, not this time” (not looking for windows updates) and ”click "Next>".

- Insert the CD-ROM, included in the delivery, into the PC's CD-ROM drive.
- Select "Install the software automatically (Recommended)" and Click "Next>".

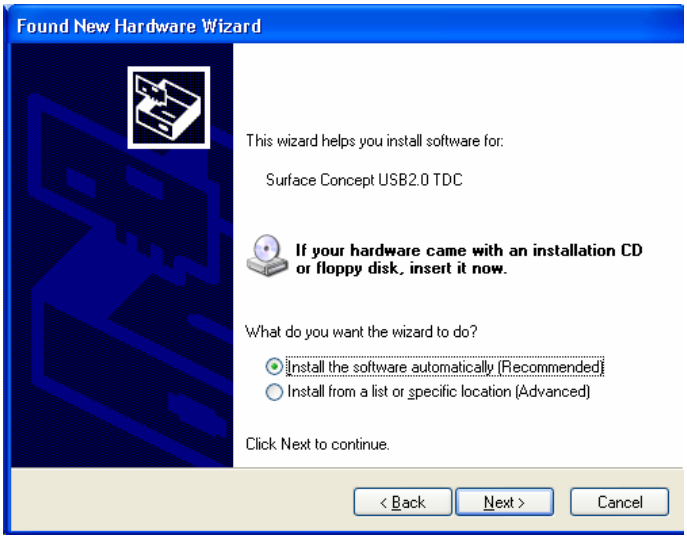

- Continue Installation although the Windows XP capability test failed.

- Enter the path where the driver is located (or Browse to it)

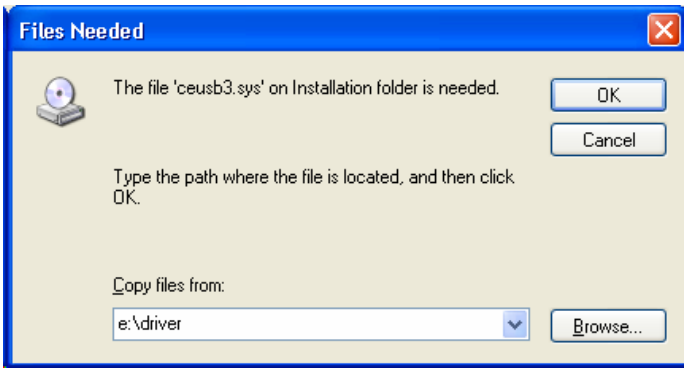

- The internal name of the USB2.0 TDC driver is “ceusb3.sys”, select it and press “Open”.

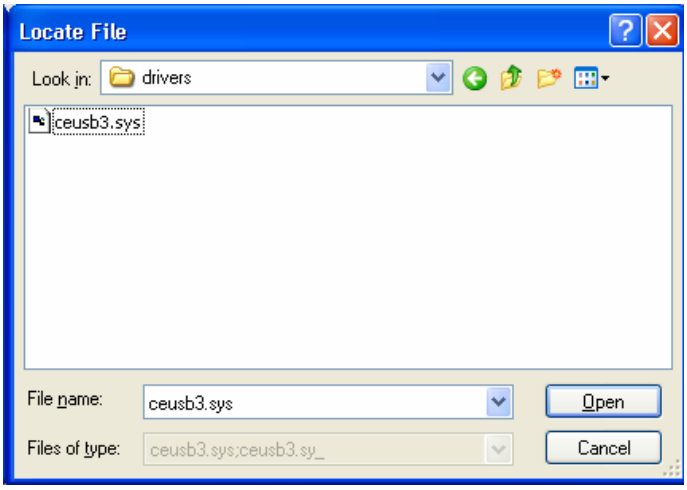

- To continue, click "OK". The driver for the Surface Concept USB2.0 TDC will be installed.
- After a few seconds, a finishing dialog should appear as below. To finish, click "Finish".

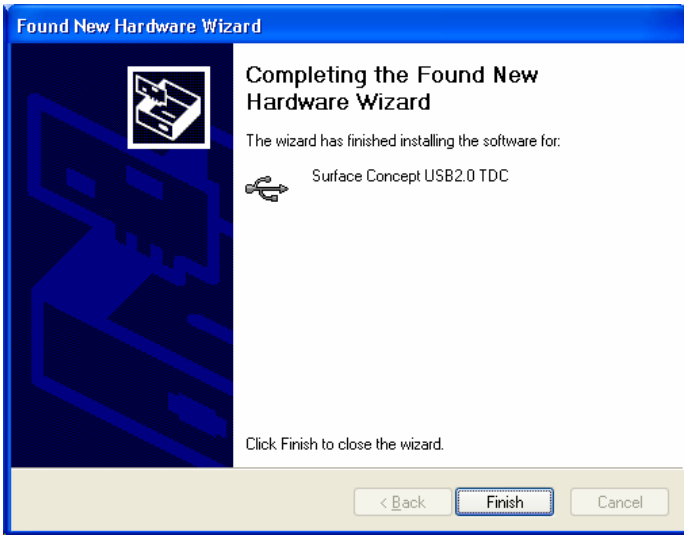

Note

After finishing the installation routine for the first time, it will start again. Go through the routine again a second time completely. The driver installation will be complete only after the second installation.
The driver has to be installed again, when the USB cable is connected to a different USB port on the PC. In this case the driver installation should start automatically.

5 DLD - Principle of Operation

5.1 Basics of Delayline Detection

A delayline detector (DLD) consists of a microchannel plate array for pulse amplification and an in-vacuum detection unit consisting of a meander structured delayline (DLD anode). Each hit position is encoded by a fast data acquisition unit, which also may detect the hit time referenced to an external clock in repetitive (stroboscopic) experiments.

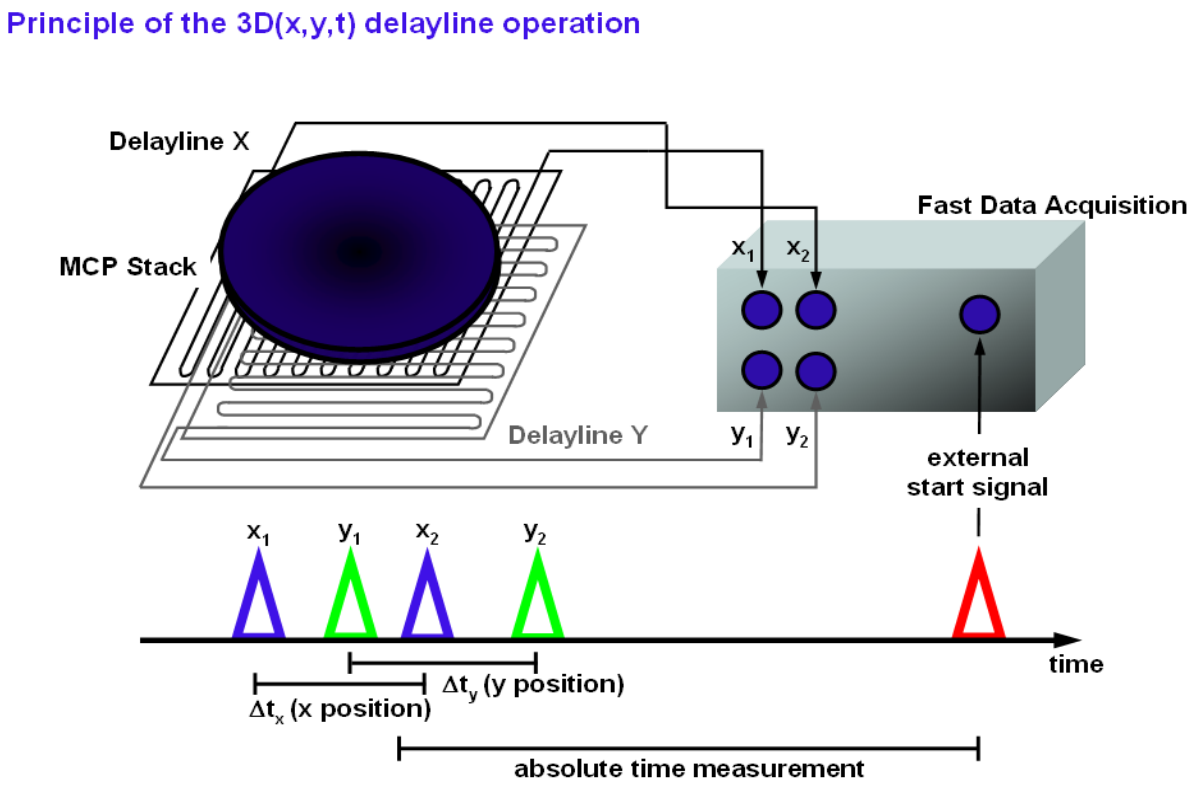

Figure 4: Principle of the 3D (x, y, t) delayline operation

The DLD anode (for 4 quadrant DLDs: each single quadrant) consists basically of two meander structured delaylines; one rotated by 90° with respect to the other and both isolated from each other. The delaylines are positioned behind a microchannel plate stack, which is required to amplify incoming electrons. The electron

cloud from the MCP stack output is drawn to the DLD meander (positive potential difference between anode and back side of MCP stack) where it induces electrical pulses in the delayline by capacitive coupling. The pulses are traveling to the both ends of the meander within a time determined by the hitting position. The average time at both ends of the meander relative to an external repetitive clock generates the time coordinate if required.

Delayline detectors are single counting devices; therefore the complete device works linearly even at extremely low numbers of incoming electrons.
The detection principle limits the maximum detectable count rates at least due to the maximum delay of the meanders. Currently, the main limitation is given by the appearance of multi-hit events, which can only be resolved up to a certain degree. The maximum count rate in the fourfold coincidence measurement is right now about a couple of million counts per second. The exact limit depends on the size of the active area of the DLD.

5.2 Basic Operational Modes of the Delayline Detector

5.2.1 2D(x, y) Area Detection

The arrival times of pulses per event at the 4 ends of the DLD meander/ quadrant are subtracted in order to determine a position in x and y (x: tx1-tx2; y: ty1-ty2). The 4 TDC stop signals are grouped internally in pairs to form the x- and y-coordinates. All DLD software adjustments are done by the end-user software according to the user's chosen parameters.

5.2.2 3D(x, y, t) time resolved imaging

The delayline detector may measure all events in temporal reference to an external clock. For this mode, the user needs to start the USB2.0-TDC by an external clock, providing a low jitter LVTTL signal to the start input of the TDC.

Time measurements are performed by summing up the arrival times of pulses at the end of the DLD meanders, i.e. the same results which are used to determine positions for each event are summed. It is possible to sum only tx1 and tx2 (tsumx) or ty1 and ty2 (tsumy). Because both sums should carry the same temporal information of a time related experiment, the total sum t(DLD) of all four time measurements (tx1, tx2, ty1, ty2) may be a good choice as well. The results of all these time sums correspond to t(sum) = t(offset) + n * (t(hit) – t(reference)), where (t(hit) – t(reference)) is the interesting time (e.g. ToF) in a given experiment, n is the number of summed time results (2 or 4 results), and t(offset) is a device related constant, which depends on cable lengths, electronics propagation times, experiments setup etc.. Therefore, it is possible to completely determine position and time of each event from only 4 precise time measurements.

The software may group all measured time sums in plain 1D time histograms, which are valid for the chosen region of interest (ROI). The time bin size for each readout channel x1, x2, y1 and y2 is 82ps in the I-mode (see chapter 8.2). The channel width in the 1D histogram is 41ps for the tsumx and tsumy histograms and 20.5ps for the total t(DLD) histogram.
The time bin size for the readout channels in the R-mode (see chapter 8.2) is 27ps and the channel width in the 1D histogram is 13.5ps for the tsumx and tsumy histograms and 6.75ps for the total t(DLD) histogram. Due to the calculation of the tsums and t(DLD), the time axis is expanded virtually (simplified expression). The t(DLD) signature can be used in order to setup the regions of interest in time for measurements of time resolved images, the software is able to sample 3D histograms as image stacks in time, where each image corresponds to one time bin of the total time histogram.

5.3 Data Acquisition

Each readout line of the detector anode is connected to a fast amplifier followed by a constant fraction discriminator (CFD) for pulse shaping. They are encapsulated inside the pulse processing electronics (ACU = Amplifier-CFD-Unit or AU = Amplifier-Unit). The main function of the CFD is digital pulse discrimination, ideally without any time-walk even at varying pulse heights. A time-to-digital converter (TDC) behind these chains serves as stop-watch for arrival time measurements. The measurement results, in terms of differences and sums are fed into the PC via a USB 2.0 interface and are completed to 2D images (with or without time stamps) by the histogram module of the data acquisition DLL. Data processing and presentation on the PC is realized with the GUI software. See the corresponding software manuals for detailed information on the software package.

5.4 Working with the DLD – Important details

The DLD is a counting system that works in a laterally resolving sense by detecting four pulses from the four ends of the delayline meanders in a fourfold coincidence. It only works correctly within a certain range of the supply voltage. The MCP voltage has to exceed an operation threshold for the detector otherwise the pulse detection is not possible. This is due to the induced pulses on the delayline which have to reach a certain amplitude to be detected by the electronics, independent on the intensity of the electron source (e.g. mercury lamp). On the other hand, if the MCP voltage and/or the intensity of the electron source are too high, the detector overloads and again pulse detection is not possible. Saturation effects of the MCPs limit the amount of electrons provided by single pulses. An intensity increase of the electron source leads to an increased number of hits on the MCP. The current per bunch and therefore the amplitude of the pulses decreases. There are two kinds of overloads: local and global. A local overload (locally high intensity on the MCP) leads to no count rate within this local area and to an absolute “black spot” in the images. An intensity too high and homogeneously distributed over the whole MCP first leads to diffuse images and with further increasing intensity to randomly distributed artificial structures up to no count rate at all (global overload). The explanation for the effects for a local overload is a pulse amplitude that is too low to be detected by the electronics. The explanation for the global overload effects is mainly the loss of the fourfold coincidence condition of an incoming event and a fitting fourfold coincidence of random pulses, respectively. High intensity on the MCPs always leads to a significant pressure increase. Therefore an observed pressure increase can always be taken as an indicator for an overload of the detector, when problems with the functionality of the DLD occur.

Note

It is easy to mistake an overload for no signal at all. To distinguish between these two, check the pressure. A pressure increase indicates an overload.

The DLD has been calibrated for an optimized MCP voltage and it is strongly advised to use this optimized voltage value for operation. It is given in the specification sheet. A change of the MCP voltage can lead to artifacts within the images. The MCP voltage should only be increased to compensate a decrease in amplification of the MCP stack do to wearing-out.

6 Delayline Detector Layout

6.1 Delayline Detector - Vacuum Wiring

The delayline detector DLD 4242 consists of a round detection area, defined by the MCP holders and the detector cover (where existing). The detector anode consists of two meander structured delaylines (named x and y), which are placed above each other (electrically isolated) and are orientated perpendicular to each other. The delayline in the top layer is referred to as the x meander and the delayline in the buried layer as the y meander. Figure 5 gives a schematic orientation of the x and y meanders,

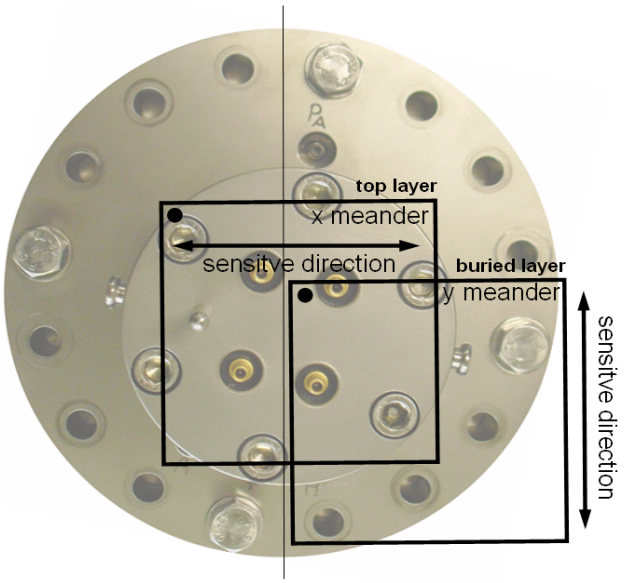

Figure 5: Schematic orientation and naming of delaylines and DLD image.

Signal readout is done via two readout lines (named 1 and 2) for each meander-structured delayline.
The naming of the readout lines is put together of the naming of the meander structured delayline x and y and the naming 1 and 2 of the individual readout lines per delayline (e.g. x2 for the second line of the x meander).
The 0/0 position of the DLD image (top left corner of displayed image in the GUI software) is marked by a black dot.

6.2 Delayline Detector – Connection Ports

The delayline detector carries a CF 40 flange with three single SHV feed-throughs for the high voltage supply of the detector and a CF 40 flange, which holds 4 SMB feed-throughs for signal transfer (see Figure 6). The flange for the signal transfer also holds an orientation pin for correct orientation of the ACU. The allocation of the four signal channels X1, X2, Y1 and Y2 on the "SMB flange" can be taken from Figure 6.

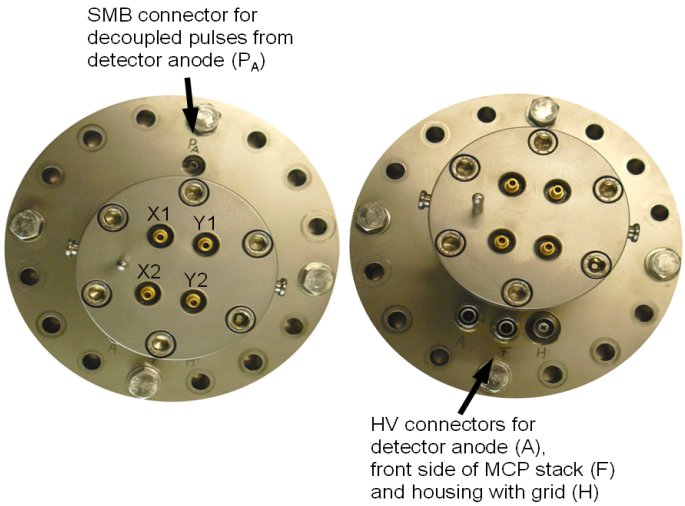

Figure 6: Connection ports for DLD.

The high voltage potentials for the delayline detector detector anode (A) front side of MCP stack (F), and housing with grid (H) are written directly on the SHV/ BNC feed-throughs. The internal high voltage connection for the delayline detector is given schematically in Figure 7.

Do not disconnect single high voltage cables from the delayline detector as long as high voltage is applied. This will lead to sparks which can damage the very sensitive detector, the MCPs and/or the analogue readout electronics seriously.

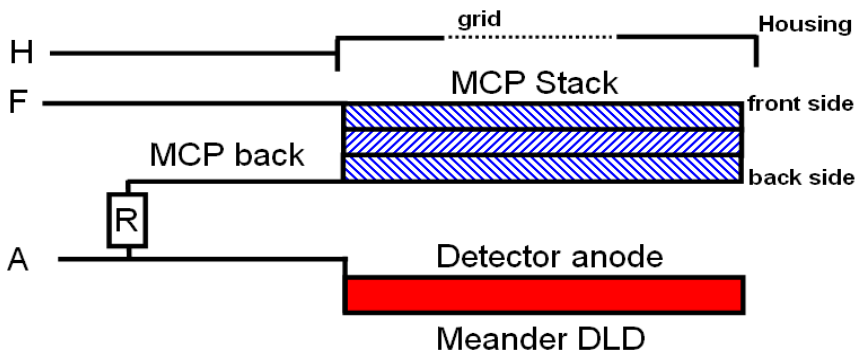

Figure 7: Internal connection of high voltage potentials (schematic)

Note

The resistance between MCP front and MCP back/ Anode (resistance of MCP stack) should be in the range of 12 – 45 MΩ (the exact value is given in the specification sheet of your detector).

7 Pulse Processing Electronics

The pulse processing electronics ACU (Amplifier-CFD-Unit) and AU (Amplifier-Unit) hold all devices like the amplifiers, pulse shapers, and constant fraction discriminators to turn the analogue pulses from the detector into digital pulses suitable for the Time-to-Digital Converter. Pulse decoupling is either performed within the pulse processing electronics or directly in-vacuum, depending on detector type and layout. Some pulse processing electronics also contain an integrated high voltage power supply for the complete detector. This also depends on the layout of the detector as well as the pulse processing electronics.

7.1 Pulse Processing Electronics ACU 3.4.2a

The ACU 3.4.2a contains the pulse amplifiers, pulse shapers and constant fraction discriminators for the four readout lines of the detector as well as the processing electronics for the pulses decoupled from the DLD anode.

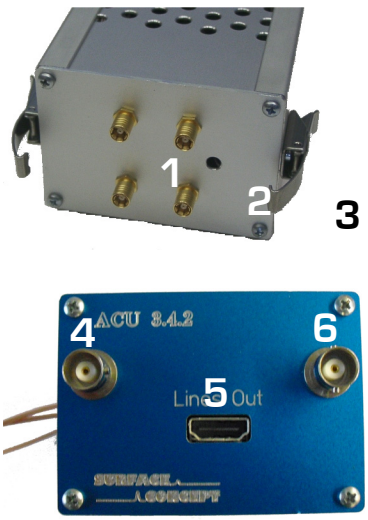

1. 4x SMB sockets for signal transfer from SMB feedthrough
2. Hole for orientation pin from SMB feedthrough
3. Clip for fastening ACU to detector flange
4. Output for pulses from anode: analogue output
5. Connection socket for DLD readout cable
6. Output for pulses from anode: TTL output
7. “P(A) in”: Coaxial cable with SMB plug for connection to SMB socket on CF100 flange for feed in of decoupled pulses from DLD anode.

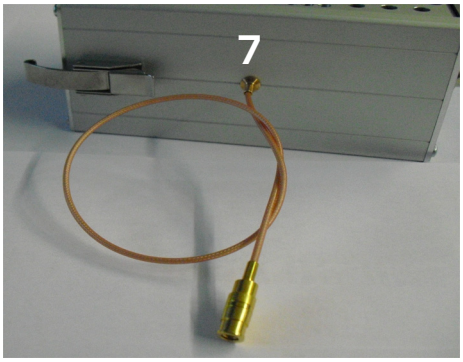

Figure 8: Layout of ACU 3.4.2

The ACU can be plugged directly onto the 4-fold SMB feed-throughs. Fasten the two clips of the ACU to fix it to the detector. Figure 8 shows the layout of the ACU 3.4.2.
Plug the single SMB plug named "P(A) in" to the SMB socket of the CF100 flange to feed in the decoupled pulses from the DLD anode into the ACU. The pulses from the DLD anode are available either as analogue pulses from the BNC socket named "analogue out" or as reworked TTL pulses from the BNC socket named "TTL out" on the front panel of the ACU.

7.1.1 Positions of the Discriminator Threshold Regulators

Discriminator threshold regulators of the 4 DLD channels as well as potentiometers for an additional adjustment can be found on the corresponding boards inside the ACU 3.4.2. They can be reached through the holes on the top side of the ACU housing (see Figure 9).

The adjustment of the readout electronics goes hand in hand with the detector voltage. In fact there is only a small "window" for an optimum setting of the readout electronics for a given operation voltage. Changes of the detector voltage, other than to compensate loss in the amplification of the MCP stack due to wearing out effects, will directly lead to a loss in performance of the readout electronics (artifacts within the image, increased dark count rate etc.). The readout electronics is adjusted to its best performance to the operation voltage of the detector when delivered. A new adjustment should not be needed. The operation voltage is given in the specification sheet.

The sensitivity of the CFD is increased (threshold decreased) by turning the screw of the potentiometer clockwise and vice versa for decreasing the sensitivity of the CFD. This is only to be used under some circumstances where adjusting becomes necessary at all.

The readout electronics is adjusted to its best performance to the operation voltage of the detector when delivered. Do not change the adjustment at all.

Changing the adjustment can easily end up with a status, where a readjustment must be made by Surface Concept.

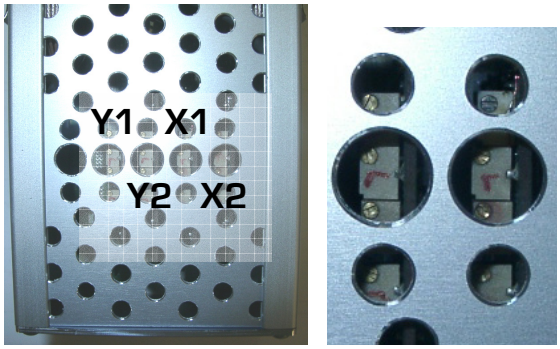

Amplification Regulator

CFD Threshold

Zero Offset Regulator

Fraction Regulator

Figure 9: Labeling of discriminator threshold and amplification regulators.

8 Time-to-Digital-Converter (TDC)

8.1 Schematic Description of the USB2.0-TDC

The USB2.0-TDC serie combines the excellent performance of the GPX TDC chip (ACAM GmbH) with a field programmable gate array (FPGA) and a high speed USB interface, either in the design with a single GPX chip (USB2.0-TDC) or with two GPX chips (Double USB2.0-TDC) operated in I-mode with about 82 ps bin size or with one (Dual Channel USB2.0-TDC) or two GPX chips (Quad Channel USB2.0-TDC) operated in R-mode with 27 ps time bin or G-mode with 41 ps time bin.
The FPGA enables comfortable setups and a variable data stream handling from the TDC via USB 2.0.
The main delayline detector and segment readout (optional device) functionality is permanently programmed. A complex FIFO design makes data losses almost impossible. The user DLL controls the data handling and streaming for the user. The Fourfold Quad Channel USB2.0-TDC combines in principle four units of the Quad Channel USB2.0-TDCs in one device. It was especially developed for the readout of high rates of 4-Quadrant Delayline Detectors.
In this light, the following brief description about the internal structure of the measurement unit is only informative:

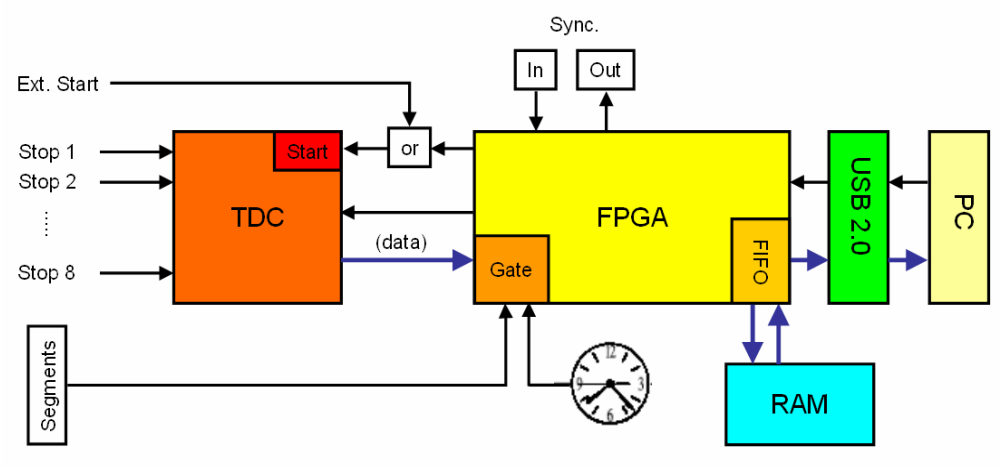

Figure 10: Schematic sketch of TDC functioning

Arrival times of pulses on the stop inputs are measured by the TDC with respect to either an internal reference start signal, provided by the FPGA, or an external start signal. Data from the segments are read out directly by the FPGA. The measurement dwell times for data from the TDC as well as from the segments are settled within the FPGA by a quartz stabilized time gate in an interval from 1 ms to 1193 h. The synchronization pulses for the external acquisition start (Sync. In) is fed directly into the FPGA, controlling the

acquisition process. The FPGA also sends out the synchronization pulse for marking the end of an acquisition (Sync. Out). The TDC data streaming can be performed as measured (RawData mode) or including a DLD specific data pre-conditioning (Pair mode). This concerns a channel pairing and a pair result arithmetic, a modulo arithmetic and many more. Communication to and from the PC is achieved via a USB 2.0 interface. Data streaming via the USB 2.0 interface is provided without losses using a large memory buffer within the device.

8.2 Basic Operation Modes of the GPX TDC Chip

The GPX TDC chip can in principle be operated in the following modes. Not all modes are available for all USB-TDC devices.

8.2.1 I-Mode (USB2.0-TDC/ Double USB2.0-TDC)

- 8 stop channels with typically 82.3 ps digital time bin resolution
- 1 start channel
- Input level: TTL or LVTTL
- 5.5 ns pulse-pair resolution on one channel and 0 ns between two channels
- 32-fold multi-hit capability = 182 MHz peak rate
- Trigger to rising or falling edge
- Measurement range: 0 ns – 10.6 µs in start-stop operation
  (corresponds to a minimum start frequency of 94.4 kHz)
- Endless measurement range by internal retrigger of START
- 10 MHz continuous rate per channel
- 40 MHz continuous rate per chip

8.2.2 R-Mode (High Resolution/ Dual Channel/ Quad Channel USB2.0-TDC)

- 2 stop channels with typically 27.4 ps digital time bin resolution
- 1 start channel
- Input level: differential LVPECL
- 5.5 ns pulse-pair resolution on one channel and 0 ns between two channels
- 32-fold multi-hit capability = 182 MHz peak rate
- Trigger to rising or falling edge
- Measurement range: 0 ns – 40 µs in start-stop operation
  (corresponds to a minimum start frequency of 25 kHz)
- Maximum Start Frequency: 7 MHz
- 40 MHz continuous rate per channel
- 40 MHz continuous rate per chip

8.2.3 G-Mode (High Resolution/ Dual Channel/ Quad Channel USB2.0-TDC)

- 2 stop channels with 41.2 ps digital time bin resolution
- 1 start channel
- Input level: differential LVPECL
- 5.5 ns pulse-pair resolution on one channel and 0 ns between two channels
- 32-fold multi-hit capability = 182 MHz peak rate
- Trigger to rising **and** falling edge
- Measurement range: 0 ns - 65 µs
  (corresponds to a minimum start frequency of 15.4 kHz)
- 40 MHz continuous rate per channel
- 40 MHz continuous rate per chip

8.3 Layout of the Quad Channel USB2.0-TDC

1. TDC Power socket
2. BNC sockets for trigger synchronization IN and OUT
3. HDMI socket for DLD readout cable from ACU
4. USB 2.0 connection socket
5. BNC socket for TDC start input
6. Power switch to turn the TDC ON/OFF. Lighted, when set to ON

Figure 11: Layout of the Quad Channel USB2.0-TDC

8.3.1 TDC Inputs (Stop + Start)

The USB2.0-TDC provides a HDMI socket for the signal input (stop inputs) from the ACU. The TDC inputs are laid out for PECL levels (R-mode operation mode).

An external start signal must be provided to the TDC for time resolved measurements. Apply standard TTL signals to the "TDC-start" input (BNC socket).

Note

The USB2.0-TDCs do not work with start signals of frequencies larger than 7 MHz. Therefore larger start pulse frequencies must be divided down with an appropriate frequency divider (e.g. divider with factor of 16 for 80 MHz start pulse frequency). The "modulo function" of the GUI software can be used to overlap multiple time spectra to form one spectrum again.

If working with an end-user software other than the Surface Concept GUI (e.g. SpecsLab, Imspector), the trigger synchronization must not necessarily be implemented. Check the manual of your end-user software for further details and contact the producer of your end-user software for further questions.

The temporal resolution is influenced mainly by the quality of the start signal while the TDC measures the time in a leading edge determination. Therefore, if the start signal is varying in time, one needs to process it by means of a constant-fraction-discriminator or similar external electronics components.

8.3.2 Trigger Synchronization IN/OUT

Image acquisition of the DLD can be synchronized to an external trigger signal. To do so, the trigger signal must be applied as TTL signal to the "SYNC IN" BNC socket of the USB2.0-TDC. The value of the variable named "ext_gpx_start" in the dld_gpx3.ini file (see the manual of your end-user software, e.g. the GUI software

manual) must be set to "1"; otherwise the TDC ignores external trigger signals. The TDC provides a TTL signal on the "SYNC OUT" BNC socket after each acquisition, independent on settings in the dld_gpx3.ini file.

Note

If working with an end-user software other than the Surface Concept GUI (e.g. SpecsLab, Imspector), the trigger synchronization must not necessarily be implemented. Check the manual of your end-user software for further details and contact the producer of your end-user software for further questions.

8.3.3 Line Input

Electrical Input (LINE):	85 V – 260 V, 50/60 Hz
Power:	100 Watt (max.)
Fuse:	1x T 1.6 A

8.4 Interface (PC) and Software

All operation functions of the USB2.0-TDCs for data readout of the detector package are encapsulated in the dynamic linked library "delayline.dll". Data processing and presentation on the PC is realized by an end-user software (e.g. GUI, SpecsLab or Imspector). See the corresponding software manuals for detailed information on the software package and the DLL interface.

9 Single HV Supply

This device produces lethal high voltage up to +4 kV. Hazardous voltages are present, therefore only persons with the appropriate training are allowed to carry out the installation, adjustment and repair work.

The high voltage for the delayline detector is provided by an external high voltage power supply of the type "Single HV Supply" which is part of the delivery package. It provides a single positive high voltage, adjustable between +0V and +4.0 kV.

1. High voltage turn ON/OFF
2. Digital display
3. Knob for high voltage adjustment.
4. Power switch, to turn ON/OFF the power supply (lighted, when set to ON)
5. Power socket
6. High voltage output via SHV socket.
7. Ground connector

Figure 12: Layout of the Single HV Supply

Use the SHV cable to connect the output of the HV power supply (no. 6 in Figure 12) to the delayline detector. Do also use the ground connector of the power supply (no. 7 in Figure 12) to ground the device. Finish the complete cabling, before the device is turned on (no. 4).

Before the high voltage is switched on (no. 1), make sure that the potentiometer (no. 3) is turned to the left as maximum possible (zero position of the HV module) in order to avoid high voltage sparks.

Increase the high voltage very carefully, especially when the detector is used for the first time after installation or has been vented before. Strictly, follow the "Start-Up" procedure described in chapter 10.2.

High voltage sparks may damage the meander or the MCPs seriously.

Do not disconnect the SHV cable, while high voltage is applied to the delayline detector. This also will lead to high voltage sparks within the detector.

Do not open the power supply, while it is in operation. Hazardous voltages are present. In case that the device must be opened, turn off the device first AND pull out the power plug.

9.1.1 Line Input

Electrical Input (LINE):	230 V, 50 Hz
Power:	20 Watt (max.)
Fuse:	1x T 1.6 A

10 Operation of the DLD

10.1 Getting Started

- Be sure, that the vacuum pressure at the detector is remarkably below 10^{-6} mbar, otherwise the microchannel plates might be damaged by a local discharging (in general: the lower the pressure, the longer the lifetime of the MCPs).
- Finish the complete cabling as described in chapter 3 and turn on the TDC.
- Use the high voltage connection as described in 10.2.1, for the first tests of the DLD.
- Start the GUI software and within it the Rate Meter. For details see the GUI software manual.
- Turn off all sources for electrons, ions, light or X-rays that might hit the detector.

CAUTION

The ion-gauge and the gatterpump are both sources for electrons, ions and also X-rays (the gatterpump). They can produce so many particles/ X-rays, that the detector is in a complete overload, even when they are not facing the detector directly. This will wear out the MCPs very fast. Turn off gatterpump and ion-gauge, if they are too close and/or in direct direction to the detector.

- Turn on the high voltage carefully, as described in the following chapter.

10.2 Turning on the High Voltage

CAUTION

High voltage sparks may seriously damage the meander or the MCPs. Observe the chamber pressure carefully every time the high voltage is turned on. Switch off the high voltage immediately in case of a temporary pressure rise by an order of magnitude or more. This indicates high voltage sparking.

CAUTION

If sparking occurs, turn down the high voltage immediately and wait some time (up to 5 min.). Start the "Start-Up" procedure again with an increased ramp time. Is it not be possible to reach the operation voltage without sparking, then turn off the high voltage, stop the procedure and call SURFACE CONCEPT for further assistance.

10.2.1 "Start-Up" Procedure (for new systems and for systems, after being vented)

The first time the detector is used or after the system has been vented, the detector high voltages must be ramped very slowly to the final operation value. The voltage increase should not exceed 100 V per minute.
A schematic sketch on how to ramp the voltages during the "Start-Up" procedure is given in Figure 13.

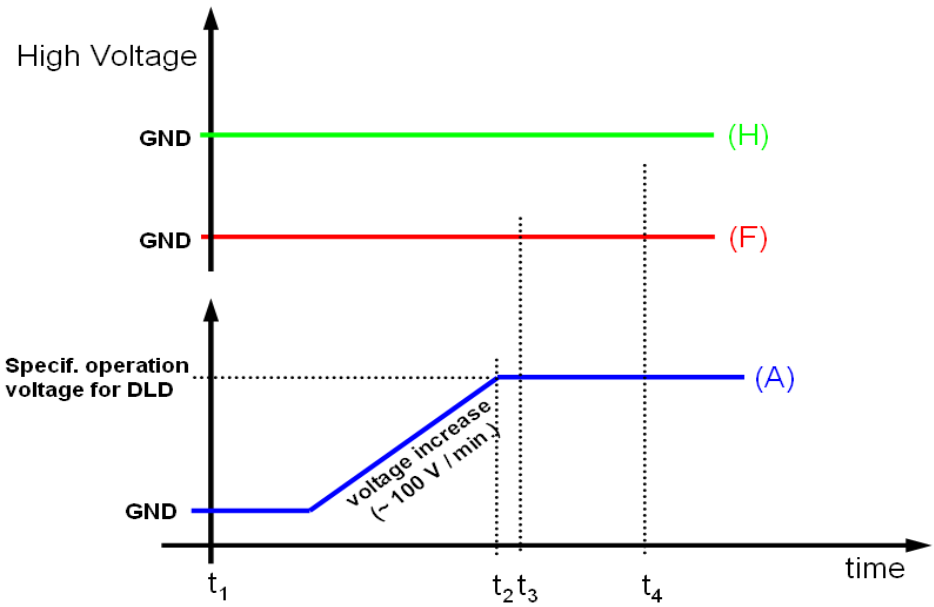

Figure 13: Schematic sketch on voltage ramping during "Start-Up" procedure. MCP F and Housing are terminated to ground.

- First start to ramp the operation voltage of the detector to the specified operation voltage (see specification sheet for exact values).
- For the first test operation, no additional reference voltages should be applied and MCP F and Housing should be terminated with the termination plug.

The analogue readout electronics has been adjusted to an optimized detector voltage. This specified voltage is given in the specification sheet of the detector. There you also find a maximum operation voltage. Never exceed this voltage.

Stick to the voltages given in the specification sheet. Contact Surface Concept before any other – especially higher – voltages are applied to the detector.

Do not forget to connect the termination plug, when not working reference potentials.

Example: A detector with an exemplary operation voltage of +1800 V should be operated. Therefore a ramp time of 18 min. should be used to change the operation voltage from GND to +1800

- **After high voltage has been applied to the detector, check the detector output by means of the GUI software. The dark count rate without any source should correspond to the value given in the specification sheet.**
- **Now you may start carefully with an electron/ light source observing the detector output.**

Note **Keep in mind the description about the important operation details in chapter 5.4.**

10.2.2 Ramping of additional reference voltages

Additional voltages can be applied to the detector housing and to the front side of the MCP stack.

- The housing can be ramped independently of the ramping of the other voltages (A and F) and it can happen in a couple of minutes.
- The voltage on the housing should not exceed a value of more than **± 400 V** (BNC connector).
- The ramping of a reference voltage on MCP F should only be made after the ramping of the operation voltage has been finished (t3 > t2).
- The reference voltage on MCP F should not exceed a value of more than **± 1000 V**.

A schematic sketch on how to ramp the voltages during the "Start-Up" procedure is given in Figure 13.

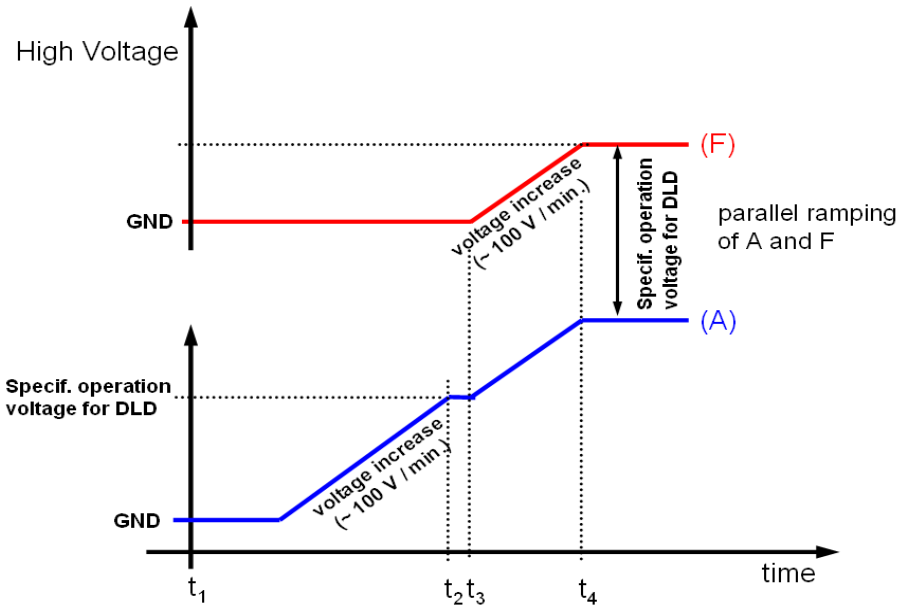

Figure 14: Schematic sketch on voltage ramping of detector anode and MCP front.

CAUTION **The operation voltage on the detector anode (A) must be ramped parallel to the reference voltage applied to MCP front. Do not increase the voltage on MCP front without adjusting the voltage on the anode. The voltage difference between anode (A) and MCP front (F) must always be the specified operation voltage. Otherwise the MCP stack can easily be damaged.**

10.2.3 Standard Start Procedure

The following procedure is used for all later starts, when the detector has already been operated in vacuum and has not been vented in between:

- Turn off all sources for electrons, ions, light or X-rays that might hit the detector.

CAUTION

The ion-gauge and the gatterpump are both sources for electrons, ions and also X-rays (the gatterpump). They can produce so many particles/ X-rays, that the detector is in a complete overload, even when they are not facing the detector directly. This will wear out the MCPs very fast. Turn off gatterpump and ion-gauge, if they are too close and/or in direct direction to the detector.

- Turn up the high voltage carefully and stepwise within 2 or 3 minutes to the operation voltage.
- Ramp the operation voltage before any additional bias voltage.
- Watch the vacuum pressure during this procedure; turn the voltages back, if an unusual increase is observed in the pressure.
- After high voltage has been applied to the detector, check the detector output by means of the GUI software. The dark count rate without any source should correspond to the value given in the specification sheet.
- Now you may start carefully with an electron source observing the detector output.

Note

Keep in mind the description about the important operation details in chapter 5.4.

CAUTION

Turn off the high voltage, close the software and turn off the TDC before performing any changes of the cabling.

10.3 Bake Out Procedure

CAUTION

The maximum allowed temperature for the detector is 150°C. Do not exceed this temperature.

- Please read the bake out instruction completely and carefully, before starting the bake out procedure.
- Windows and feed-throughs should be wrapped with aluminum foil, to protect them from rapid temperature changes.
- The use of heating tapes and jackets is not recommended, due to danger of local overheating.
- Do not remove the blankets until the entire system has thoroughly cooled off.
- Do not operate the detector before the temperature has returned to ambient conditions.
- The detector electronics (ACU) must be removed before any bake out.

CAUTION

After a bake out, the detector needs at least half a day (approx. 12 hours) to cool down. If channel plates are operated at higher temperatures (> 50°C) they can suffer damage. Such channel plates will lose gain and exhibit a markedly higher detector plateau.

Even if the detector housing feels just warm, any internal parts seated on insulators (e.g. the meander detector) may still be too hot for safe operation. It is imperative that all users be informed of this issue and take the necessary precaution to ensure proper device operation.

11 Microchannel Plate (MCP)

Note **Contact SURFACE CONCEPT before performing a replacement.**

Take care to note the orientation of the MCPs. The channels in the MCPs include a certain angle against the surface normal to the plate and the MCPs must be mounted in a chevron or z-stack configuration (depending on no. of MCPs). All parts of the detector, especially the MCPs should be handled with great care. The MCP surfaces are very sensitive and should never be touched or scratched.

11.1 Storage

Because of their structure and the nature of the materials used in manufacture, care must be taken when handling or operating MCPs. The following precautions are strongly recommended:

- The most effective long-term storage environment for an MCP is an oil-free vacuum.

11.2 Handling

- Shipping containers should be opened only under class 100 Laminar flow cleanroom conditions.
- Personnel should always wear clean, talc-free, class 100 clean-room compatible, vinyl gloves when handling MCPs. No physical object should come into contact with the active area of the wafer. The MCP should be handled by its rims, there is no solid glass border! Use clean degassed tools fabricated from stainless steel, Teflon™ or other ultra-high vacuum-compatible materials. Handling MCPs should be limited to trained, experienced personnel.
- MCPs without solid glass border should be handled very carefully with great care taken to contact the outer edges of the plate only.
- The MCP should be protected from exposure to particle contamination. Particles which become affixed to the plate can be removed by using a very pure and low pressure air flow such as from a clean rubber bellows.
- The MCP should be mounted only in fixtures designed for this purpose. Careful note should be taken of electrical potentials involved.

CAUTION

Voltages must not be applied to the device while at atmospheric pressure. The pressure should be 1 x 10^{-6} mbar or lower at the microchannel plate before applying voltage. Otherwise, damaging ion feedback or electrical breakdown will occur.

11.3 Operation

- A dry-pumped or well-trapped/diffusion-pumped operating environment is desirable. A poor vacuum environment will most likely shorten MCP life or change MCP operating characteristics.
- A pressure of 1 x 10^{-6} mbar or better is preferred. Higher pressure can result in high background noise due to ion feedback.
- When a satisfactory vacuum has been achieved, voltages may be applied. It is recommended that this is done slowly and carefully. If fluctuations do appear, damage or contamination should be suspected and the voltage should be turned off. The assembly should then be inspected before proceeding.
- Voltage across single MCPs should not exceed the max. voltage given in Table 2 and in the specification sheet of the detector. Higher potentials may result in irreversible damage.
- MCPs can be degraded by exposure to various types of hydrocarbon materials which raise the work function of the surface, causing gain degradation.
- Operation at higher temperatures (> 50 °C) will cause gain degradation.

Thickness	1.0 mm
Outer diameter	50 mm
Active diameter	46 mm
L/D (channel length / channel diameter)	40 : 1
Resistance (single MCP)	3 – 13 MOhms
Max. voltage (single MCP)	1000 V
Max. Gain @ 1000 V	$\geq 1 \cdot 10^{8}$ minimum
Pore size (diameter)	25 µm
Center – to – Center Spacing	32 µm
Bias angle of channels	8° ± 1°
Quality level	detection quality, extended dynamic range
Open area ratio	45 % minimum
Operating pressure	$< 1 \cdot 10^{-6}$ mbar

Table 2: MCP Specifications

12 Technical Data

Delayline detector General:

HV capability:	none
Active area:	∅ 44 mm round
Operation voltage at detector:	see specification sheet
Max. voltage at detector:	see specification sheet
Max. voltage at MCP front:	+/- 1000 V
Max. voltage at housing:	+/- 400 V
Max. voltage difference between MCP back and anode:	900 V (typ. 150 - 400 V), not adjustable
Max. bake-out temperature:	150°C
Vacuum pressure range for operation:	< 10^{-6} mbar

Amplifier – CFD – Unit ACU 3.4.2:

No. of Amplifier-CFD channels:	4
Bandwidth of DLD amplifiers:	1.6 GHz
CFD working frequency:	200 MHz
CFD jitter (max.):	20ps
CFD walk (typ.):	< 50 ps (while ambient temperature varies less then 5 K)

13 List of Figure

EU Declaration of Conformity

Manufacturer **Surface Concept GmbH**
Staudinger Weg 7
D - 55128 Mainz
Germany

Product details Delayline Detector DLD 1D, 2D, 3D, Quadrant in all variations and sizes to be operated with ACU and USB2.0-TDC in all versions and subversions.

The above named products comply with the following European directive:

89/336/EEC	Electromagnetic Compatibility Directive, amended by 91/263/ EEC and 92/31/ EEC and 93/68/EEC
73/23/EEC	Low Voltage Equipment Directive, amended by 93/68/EEC

The compliance of the above named product to which this declaration relates are in conformity with the following standards or other normative documents where relevant:

EN 50081-1 (3/94)	Electromagnetic Compatibility Generic Emission Standard-Part 1:
EN50082-1 (3/94)	Electromagnetic Compatibility
EN 61010-1 (2001)	Safety Requirements for Electrical Equipment for Measurement, Control and Laboratory Use

For and on behalf of **Surface Concept GmbH**

SURFACE CONCEPT
Surface Concept GmbH,
Staudingerweg 7, 55128 Mainz

Mainz, 15.09.2009 Legal signature.....
(Pasqual Bernhard, product manager)

This declaration does not represent a commitment to features or capabilities of the instrument. The safety notes and regulations given in the product related documentation must be observed at all times.

EU Declaration of Conformity 2008

Manufacturer **Surface Concept GmbH**
Staudinger Weg 7
D - 55128 Mainz
Germany

Product details High voltage power supply "Single HV Supply"

The above named product comply with the following European directive:

89/336/EEC	Electromagnetic Compatibility Directive, amended by 91/263/ EEC and 92/31/ EEC and 93/68/EEC
73/23/EEC	Low Voltage Equipment Directive, amended by 93/68/EEC

The compliance of the above named product to which this declaration relates are in conformity with the following standards or other normative documents where relevant:

EN 50081-1 (3/94)	Electromagnetic Compatibility Generic Emission Standard-Part 1:
EN50082-1 (3/94)	Electromagnetic Compatibility
EN 61010-1 (2001)	Safety Requirements for Electrical Equipment for Measurement, Control and Laboratory Use

Issued on 01. February 2008

For and on behalf of **Surface Concept GmbH**

SURFACE CONCEPT
Surface Concept GmbH,
Staudingerweg 7, 55128 Mainz

Mainz, 28.02.2008 Legal signature .....
(date) (Dr. Andreas Oelsner – Managing Director)

This declaration does not represent a commitment to features or capabilities of the instrument. The safety notes and regulations given in the product related documentation must be observed at all times.

Geschäftsführer: Dr. Andreas Oelsner; Handelsregister: Amtsgericht Mainz HRB 40058
Staudingerweg 7, D-55128 Mainz
Phone: 0049 (0) 6131 3923632 • Fax: 0049 (0) 721 151468621
www.surface-concept.de
Steuer Nr. 26/667/0562/9; USt-IdNr. DE814509963